Instructions for use

HOME DELUXE
WIR MACHEN ZUHAUSE

Outdoor Sauna CUBE XL

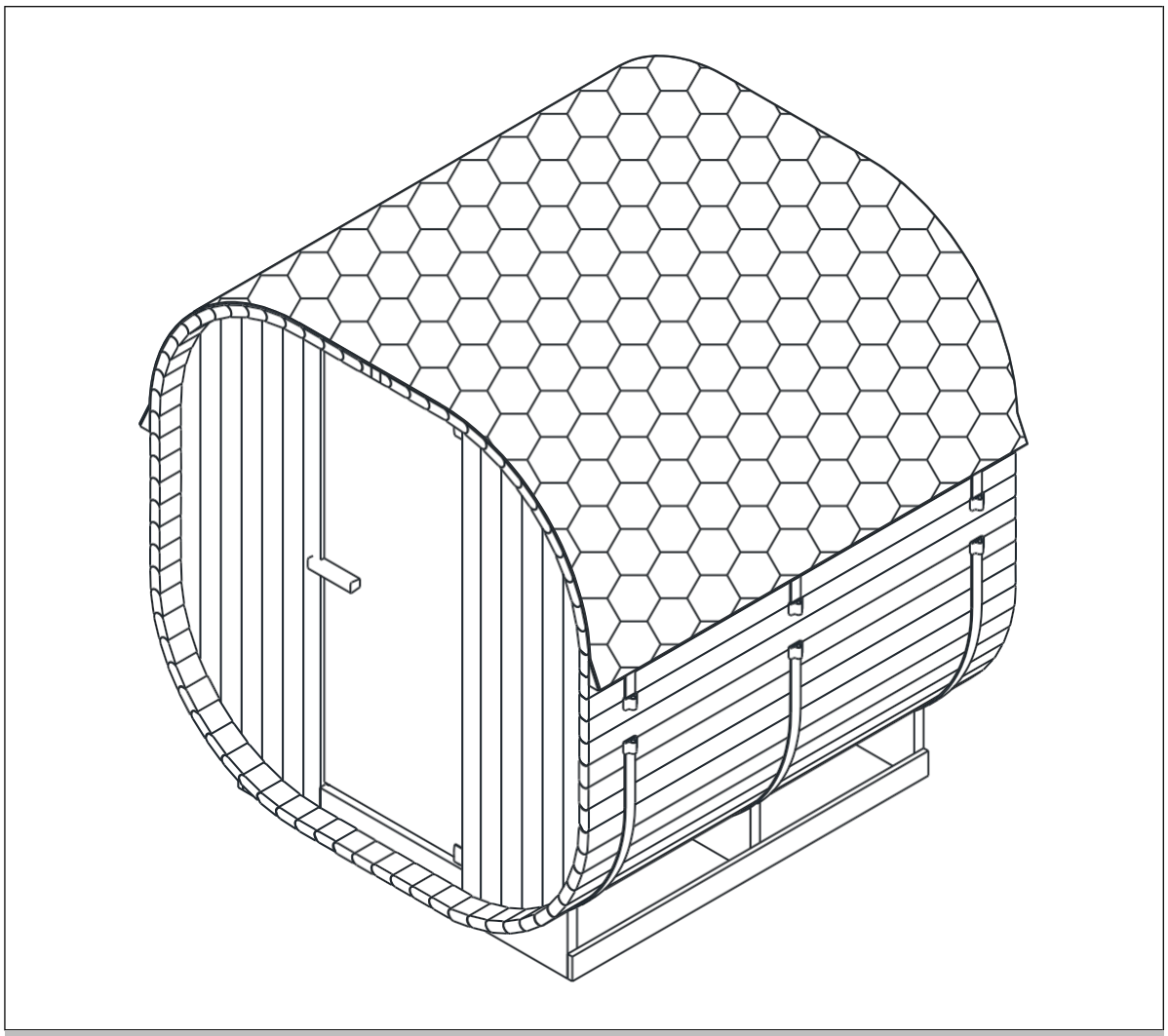

Original instructions for use

Designed in Germany

IMPORTANT:
KEEP FOR FUTURE REFERENCE. READ CAREFULLY!

Table of contents

1. General 3
1.1. Product overview 3
1.2. General information 3
1.3. Warranty 3
2. Information on the instructions for use 4
2.1. Availability of the instructions for use 4
2.2. Target groups of the instructions for use 4
2.3. Translation information 4
2.4. Explanation of symbols 4
2.5. General information on the instructions for use 5
2.6. Intended use 5
2.7. General safety instructions 5
3. Product features 7
3.1. Technical data 7
3.2. Product description 8
4. Scope of delivery 9
5. Assembly of the sauna 12
5.1. Safety instructions 12
5.2. Structure of the product 13
5.3. Sauna heater model: SCA-80 22
5.4. Safety instructions 22
5.5. Installation and electrical connection 23
6. Application 25
6.1. Safety instructions 25
6.2. Initial commissioning 26
6.3. Operation 26
6.4. Controls 27
6.5. Sauna stones and sauna infusion 27
7. Troubleshooting 28
8. Maintenance and care 29
9. Dismantling 29
9.1. Safety instructions 29

10. Disposal.....30
10.1. General notes.....30
Electrical and electronic equipment - Information for private households.....31

Dear customer,

Thank you for choosing a product from **Home Deluxe GmbH.** We wish you much pleasure with your new Outdoor Sauna Cube XL.

The instructions for use support you during installation, commissioning, operation and maintenance of the product. The instructions for use and the safety instructions must be read carefully and completely. Observe these instructions in order to avoid dangers.

1. General

1.1. Product overview

Outdoor Sauna CUBE XL	|	Item ID: 21482	|	Variant ID: 51137
Package 1/2	|	Item ID: 21483	|	Variant ID: 51138
Package 2/2	|	Article ID: 20006	|	Variant ID: 48671

1.2. General information

In order to live up to our claim, we are constantly improving the quality, simplifying the assembly, operation or adapting the products to the customer's wishes. Due to these changes, the current version of the instructions for use can be found on our homepage.

The term "product" is used in the instructions for use for the "Outdoor Sauna CUBE XL, unless individual reference is made to the sauna or the sauna heater.

1.3. Warranty

The statutory liability for defects and warranty rights apply from the date of purchase.
Home Deluxe GmbH accepts no liability for damage caused by failure to observe the instructions for use. Complaints resulting from improper assembly or use are excluded from the warranty. In the event of defects to the product, please contact our customer service in writing via the contact form on our homepage, stating the product name, the serial number and a photo of the type plate:

Home Deluxe GmbH
Schanzeweg 2
32312 Lübbecke
Germany
Tel.: +49 (0)5743 6181-0
www.home-deluxe-gmbh.de

If you have any further questions, please contact our customer service via the contact form.

2. Information on the instructions for use

2.1. Availability of the instructions for use

The instructions for use are part of the product and should be kept complete and in the immediate vicinity of the product.

2.2. Target groups of the instructions for use

The instructions for use must be read and observed by every person involved in any of the following activities or use:

- Unpack
- Assembly / Installation
- Commissioning / Operation
- Maintenance / Testing / Care
- Troubleshooting / Repair
- Disposal

2.3. Translation information

The original instructions for use were written in German. Any other language available is a translation of the German version.

2.4. Explanation of symbols

Symbol	Explanation of symbols
	**WARNING** The symbol indicates possible hazards that can cause fatal and serious injuries. Before carrying out the corresponding assembly or application step, the corresponding note must be read.
	**INFO** The symbol gives important information and indicates damage to property. Observe these before carrying out the corresponding assembly or application step in order to understand problems and avoid damage.
	**CE marking** The symbol declares the conformity of the product with the applicable requirements imposed by the European Community. The current declaration of conformity is available from Home Deluxe GmbH on request.
	**Follow the instructions for use** The symbol indicates that the instructions for use must be consulted.
	**Read instruction manual** The symbol indicates that the instructions for use must be read carefully before using the product.
	**Covering prohibited** The symbol indicates that it is forbidden to place anything on or cover the respective object.
	**Disposal of electrical and electronic equipment** Electrical and electronic equipment must not be disposed of with household waste!

Symbol	Explanation of symbols
	**Protection class I** The symbol indicates that all conductive housing parts of the equipment must be connected to the protective earth conductor system of the fixed electrical installation. It is a protective earth. In the event of a fault current, the circuit is de-energised by a fuse.
	**Alternating current** The symbol indicates that the product is operated with alternating current.

2.5. General information on the instructions for use

The instructions for use refer to the Outdoor Sauna CUBE XL. It contains important information on assembly, operation, maintenance and cleaning. The instructions for use, in particular the safety instructions, must be read carefully before the product is put into operation. Only use the product as described in these instructions for use to prevent accidental injury or damage. If the product is passed on to third parties, these instructions for use must also be handed over.

2.6. Intended use

The sauna is of high quality, durable and exclusively intended or suitable for private use to a reasonable and customary extent. Furthermore, our product is not intended for commercial use. Commercial use is only permitted with the written consent of Home Deluxe GmbH.

The product is an outdoor sauna and is intended exclusively for saunas for 4-6 people. Only use the product as described in these instructions for use. Any other use is considered improper and may result in property damage or personal injury. The manufacturer accepts no liability for damage caused by improper or incorrect use.

arise or have arisen.

2.7. General safety instructions

General hazard warnings



- Improper handling can lead to considerable personal injury and damage to property. For this reason, assembly, installation, commissioning, troubleshooting, maintenance and repair work may only be carried out by qualified persons.
- This product can be used by children aged from 8 years and above and persons with reduced physical, sensory or mental capabilities or lack of experience and knowledge if they have been given supervision or instruction concerning use of the product in a safe way and understand the hazards involved. Children must not play with the appliance. Cleaning and user maintenance must not be carried out by children without supervision.
- For fixed products that are not equipped with disconnecting devices that have all-pole contact separation and allow complete disconnection under overvoltage category III, it is stated that the disconnecting devices must be installed in the fixed wiring in accordance with the wiring instructions.
- If the mains cable to the power supply is damaged, take the product out of operation until the mains cable is replaced by the manufacturer, its customer service or a qualified electrician.
- **Only** assemble the product if the scope of delivery is complete and in perfect condition.



- Make sure that all parts are undamaged and properly assembled. Improper assembly may result in injury. Damaged parts can affect safety and function.
- Only place the product on a safe, level and solid surface.
- Do not make any changes to the product
- Check the fastening at regular intervals.

Danger for children



- Keep children away from packaging materials. There is a risk of suffocation, among other things!
- Children must not play in and on the product.
- Do not place the product directly or in the immediate vicinity of a play area.
- Cleaning and user maintenance must not be carried out by children without supervision.

Risk of injury

Improper handling of the product may result in injury.



- Do not make any constructive changes to the product. For any modification, the permission of the manufacturer must be obtained and carried out according to the manufacturer's instructions.
- To avoid burns or electric shocks, make sure that no metallic objects or tools come into contact with the heating elements.
- To avoid the risk of electric shock, all installations and related maintenance must be carried out by a qualified electrician.
- If the power supply cable is damaged, take the product out of operation until the power supply cable is replaced by the manufacturer, its customer service or a qualified electrician.

Risk of damage



- Improper handling of the product can lead to damage.
- Repair and maintenance work on the electrical system may only be carried out by a qualified electrician.

Explosion hazard



- In the event of a fire, notify the fire brigade immediately and make sure that no one is in the sauna.
- **Caution:** Do not store highly flammable, combustible or explosive substances inside the product. Highly flammable substances can catch fire.

3. Product features

3.1. Technical data

Sauna	
Material	Spruce wood
External dimensions (W x D x H)	184.2 x 220 x 194.50 cm
Wall thickness	38 mm
Seat surface (W x D)	approx. 194 x 50 cm
Gross weight	515 kg
Sauna operation	4- 6 persons
Door opening angle	90°
Door	6 mm toughened safety glass (ESG)

Sauna heater	
Supply voltage	380 V AC
Frequency	50 - 60 Hz
Power	8 kW
Protection class	I
Protection class[1)]	IPX4
Depth	300 mm
Wide	400 mm
Height	530 mm
Temperature	max. 80 - 100°C

Sauna lamp	
Supply voltage	220 - 240 V AC
Frequency	50 - 60 Hz
Power	max. 40 W / E27
Protection class[1)]	IPX4

1) IPX4: Protection against splashing water

Dimensional drawings

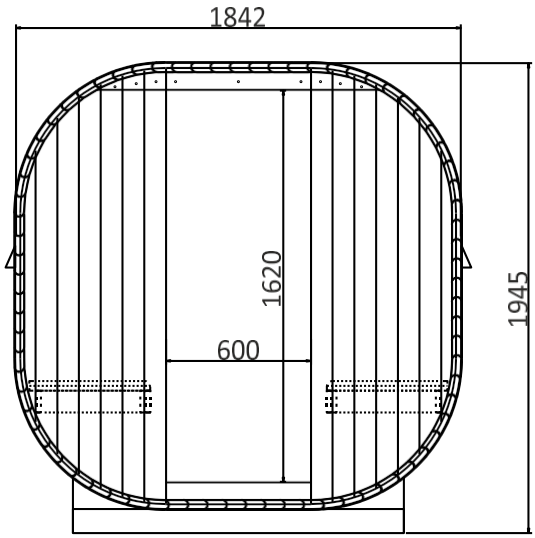

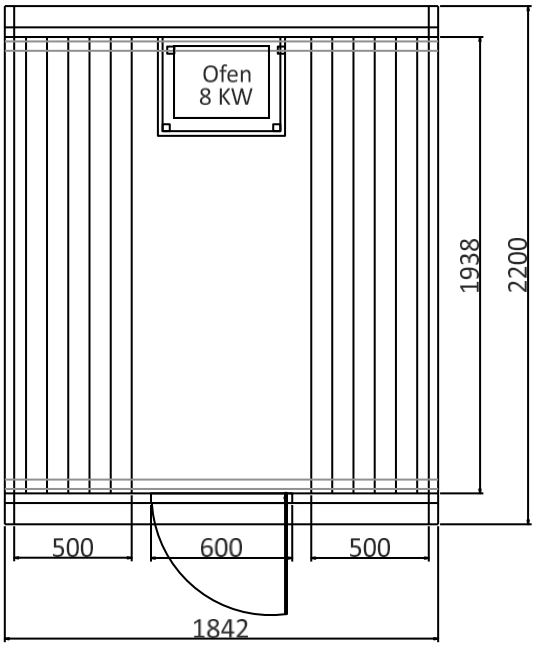

3.2. Product descriptionDiscover the high-quality barrel sauna made of robust spruce wood, which not only guarantees excellent durability, but is also a real eye-catcher in your garden. The sauna heater ensures the perfect temperature between 80 and 100°C. In addition, the sauna is equipped with roof shingles that last long and look chic.

The product is made of untreated spruce wood and is resistant to environmental influences, making it durable and environmentally friendly.

The glass door made of safety glass (ESG) allows a clear view of the sauna and ensures safety. The two ventilation holes also ensure optimal air circulation.

4. Scope of delivery

Check the packaging for external damage upon delivery. Furthermore, immediately after unpacking, check that the scope of delivery is complete and that the product and all components are in perfect, undamaged condition. Only assemble the product if the scope of delivery is complete and undamaged.

The LED bulb is not included in the scope of delivery. Please purchase an E27 LED bulb from a retailer.

Note the serial number of the control box, as this number is required in case of repair or ordering of spare parts.

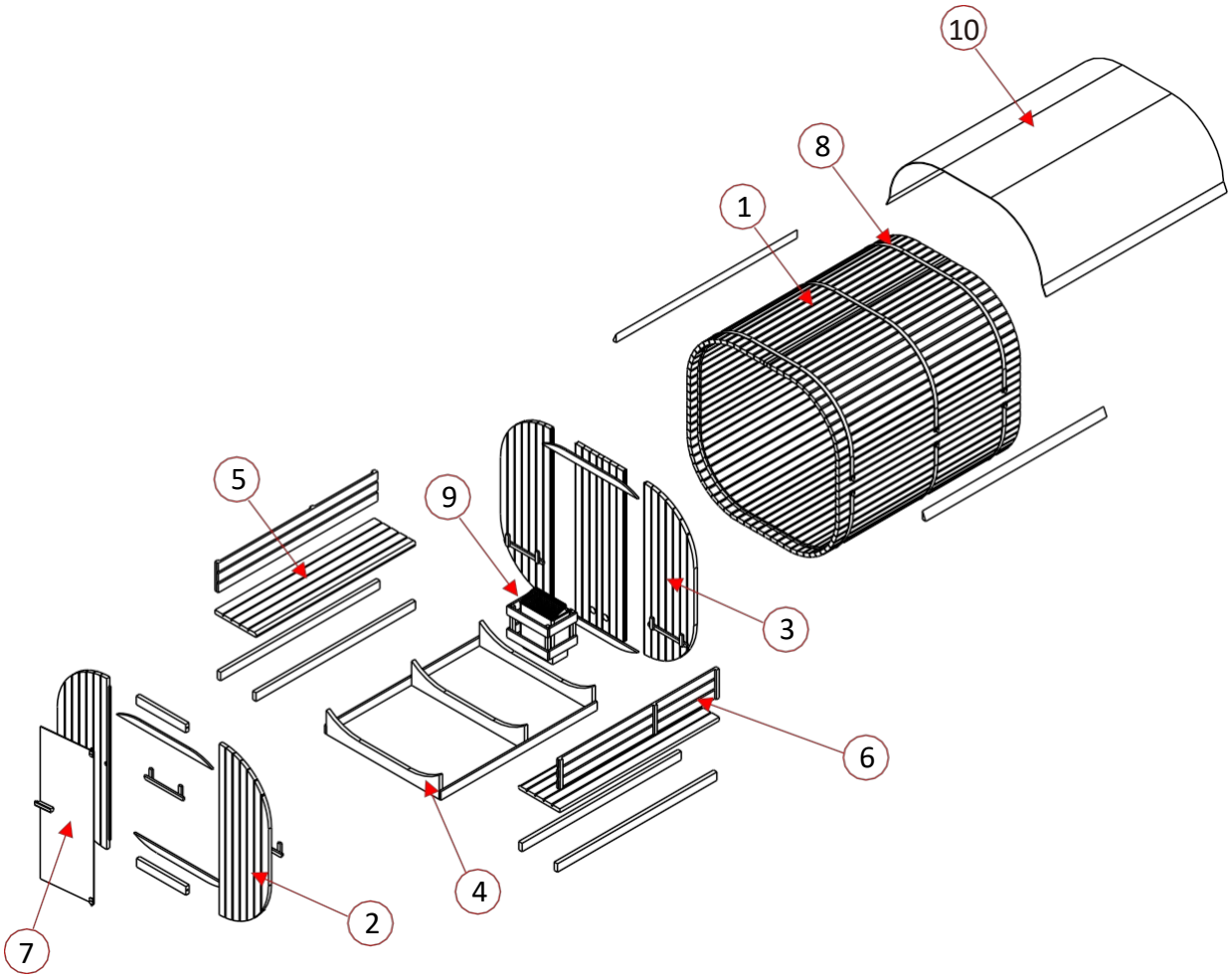

Individual parts of the sauna

No.	Description		Quantity	Images
1.1	Exterior moulding (2200 x 96 x 38 mm)		68	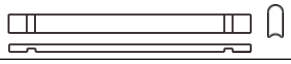
1.2	External slat narrow (2200 x 45 x 38 mm)		1	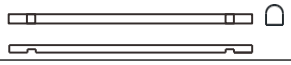
1.3	External slat narrow (2200 x 45 x 38 mm)		1	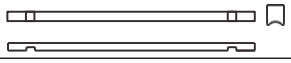
1.4	Compensation strip	(2200 x 10 x 38 mm)	1	
		(2200 x 20 x 38 mm)	1	
		(2200 x 30 x 38 mm)	1	

No.	Description	Quantity	Images
1.5	Roof shingles mounting strip (2200 x 90 x 40 mm)	2	
1.6	Bottom rail with hole (2200 x 96 x 38 mm)	1	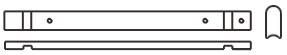
2.1	Front wall left (1800 x 600 x 40 mm)	1	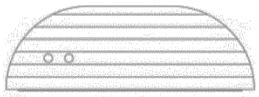
2.2	Front wall right (1800 x 600 x 40 mm)	1	
2.3	Top door frame (600 x 103 x 40 mm)	1	
2.4	Bottom door frame (600 x 90 x 40 mm)	1	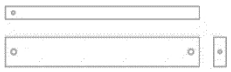
2.5	Connecting strip wall (1152 x 70 x 20 mm)	4	
2.6	Seat bench support (472 x 110 x 40 mm)	4	
3.1	Rear panel right (1800 x 615 x 40 mm)	1	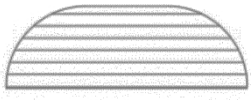
3.2	Centre back panel (1800 x 590 x 40 mm)	1	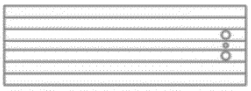
3.3	Rear wall left (1800 x 615 x 40 mm)	1	
4.1	Sauna rack (1370 x 252 x 40 mm)	3	
4.2	Frame side rail (1892 x 90 x 20 mm)	2	
5.1	Bench (1936 x 500 x 40 mm)	2	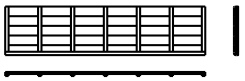
5.2	Bench rest (1936 x 90 x 40 mm)	4	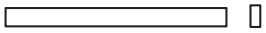
6	Backrest (1936 x 310 x 40 mm)	2	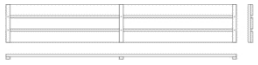
7.1	Door handle complete (180 x 40 x 40 mm) (135 x 40 x 40 mm)	1 1	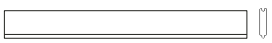
7.2	Glass door (1604 x 594 x 6 mm)	1	
7.3	Door hinge complete	2	
8	Tensioning strap (6250 mm)	3	
9.1	Oven guard long (580 x 90 x 20 mm)	2	
9.2	Board stove guard short (330 x 90 x 20 mm)	4	
9.3	Corner post (330 x 33 x 33 mm)	4	

No.	Description	Number	Images
10	Insulating foil (2220 x 1000 mm)	3	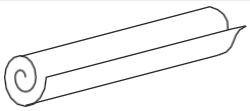
11	Sauna bucket	1	
12	Sauna ladle	1	
13	Hourglass	1	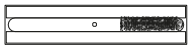
14	Sauna heater (incl. sauna stones)	1	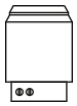
15	Thermometer		
16	Lamp cover	1	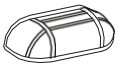
17	Lampshade	1	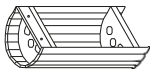
18.1	Roof shingle long	46	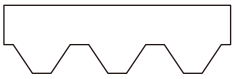
18.2	Roof shingles short	14	

Mounting material

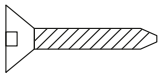							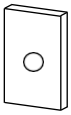	 Rubber seal	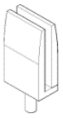
Ø4x30	Ø4x40	Ø4x45	Ø4x60	Ø4x12	Ø12x100	Ø6x60	30x20x2	Ø22	Hinge
10x	168x	30x	36x	5x	3x	2x	1x	6x	2x

					 Wood cover		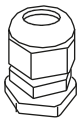			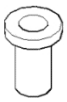
Ø60	Ø58	M12	Ø12 / Ø24	Ø12	Ø10.5 x Ø16	60x200 x 0,5	PG11 / M18	Ø60 x 10	Mixed screws	Ø16 x 20
1x	1x	6x	6x	6x	2x	6x	1x	2x	4x	2x

5. Assembly of the sauna

Installation site



The installation of the sauna may be regulated by building regulations. The permit to install the sauna can be withdrawn by the authorities if the installation conditions are violated.

- Talk to the responsible authority before setting up.
- Adhere to applicable regulations.
- Mount the product on a level, solid surface.
- Keep a safety distance of at least 2 metres from other structures. This makes installation easier and can save lives in the event of a fire.

Note: After assembly, treat the outside of your sauna with a commercially available wood stain, check the coating annually, the coating may need to be renewed.

Note: Check the counterbores and hole diameters of the holes to avoid damaging the wood.

5.1. Safety instructions

The following health and safety information must be read carefully.

Risk of injury
Improper handling during assembly can lead to injuries



- Your product will be delivered in some packages. Please make sure that the parcels are opened at the top. Be very careful when opening the parcels as there are fragile parts and glass in the parcels.
- **Only** assemble the product if the scope of delivery is complete and undamaged.
- Only place the product on a safe, level and solid surface.
- To avoid injury, at least 3 people are required to assemble the product.
- Wear protective clothing such as safety shoes and protective gloves during assembly.
- Keep children away from the assembly site while assembling the product. The scope of delivery contains small parts that can be swallowed or cause serious injuries.

5.2. Structure of the product

The product is delivered disassembled and can be assembled with a little effort. Follow the assembly instructions carefully. If they are not followed, the function and safety of the product cannot be guaranteed.

Tools needed

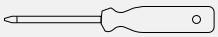	Screwdriver	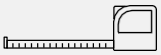	Measuring tape
	Twist drill	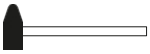	Hammer
	Allen key		Cutter knife
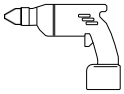	Drilling machine		Stepladder
	Spirit level		Pencil
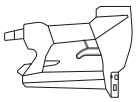	Tacker		Allen key

Preparation for setting up the sauna:

Mount the product **only** on a flat, horizontal surface. For better stability and stability, we recommend creating a foundation or similar.

Step 1: Assembly of the underframe

- Screw the frame, 3x support **4.1** and 2x crossbar **4.2,** with the screws and make sure that the frame is perpendicular.

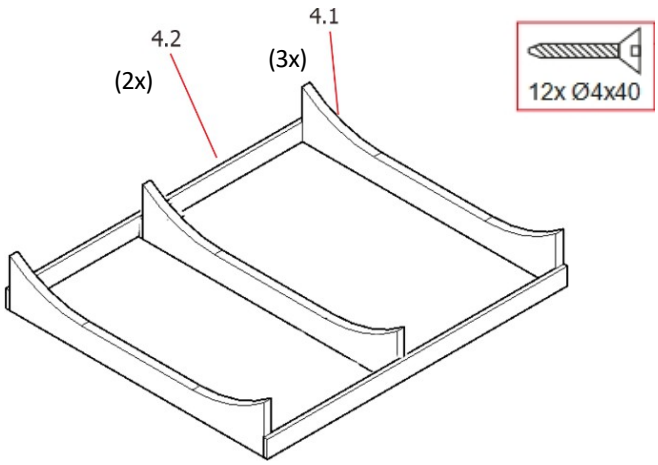

Step 2: Mounting the front wall

- Fit the front panel with the door cut-out first, making sure the vent holes are on the correct side.
- Screw the two holders for the bench seats **2.6** to the front wall.
- Screw the two supports for the floor and upper stability **2.6** to the front wall.
- Screw the connecting strip **2.5**, top and bottom, to the wall.

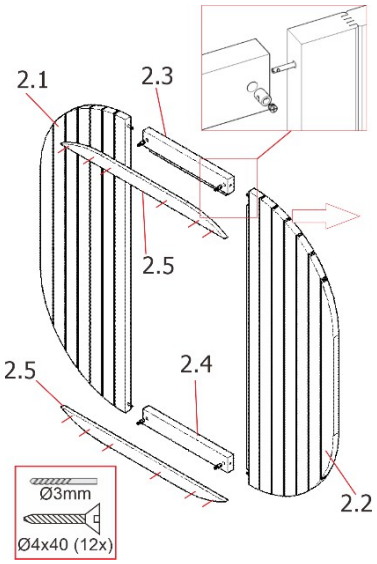

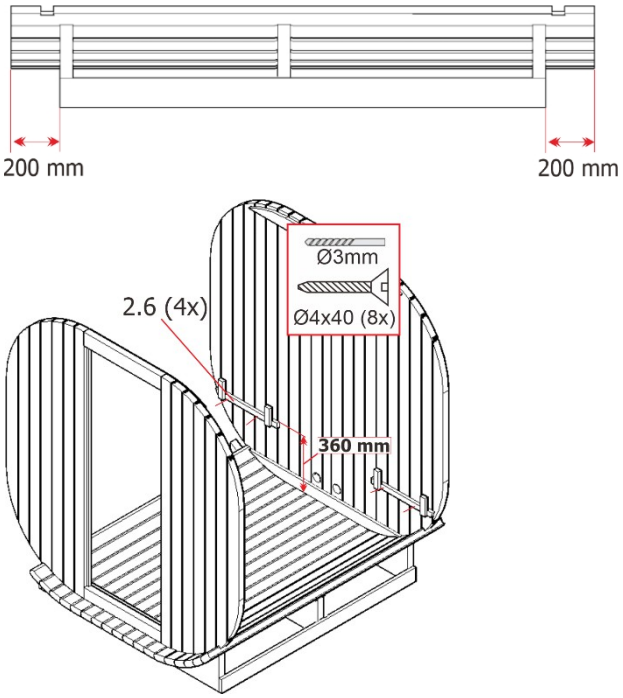

2.1/2.2/2.3/2.4/2.5/2.6

Step 3: Mounting the back wall

- Fit the two caps for the fresh air supply from the outside in the rear wall.
- Screw the two holders for the bench seats **2.6** to the inside of the rear wall.
- Screw the two supports for the bottom and upper stability **2.6** to the back wall.
- Screw the connecting strip **2.5**, top and bottom, to the wall.

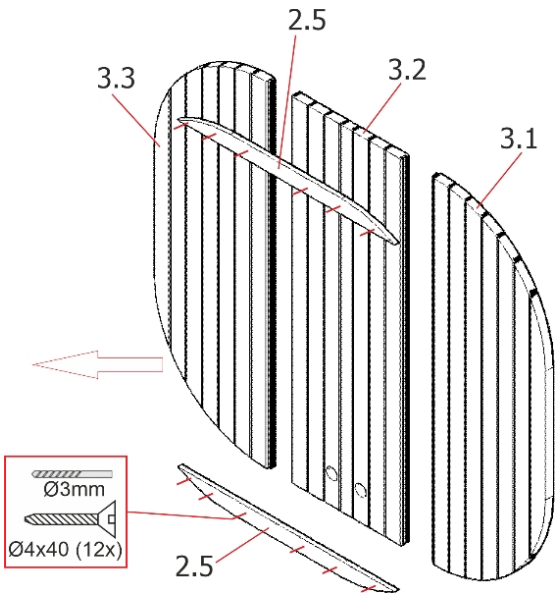

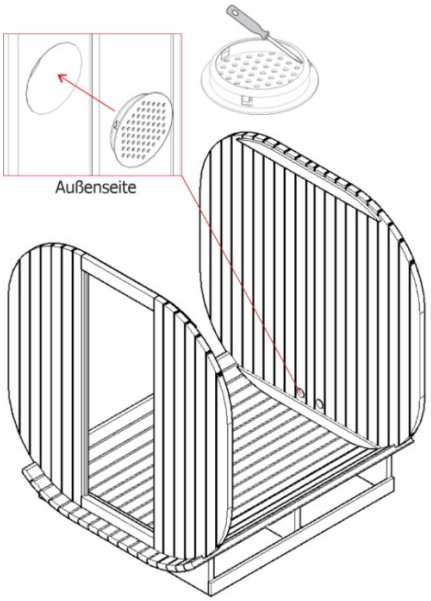

2.5/2.6/3.1/3.2/3.3

Step 4: Assembling the floor, front and back wall

- Screw the wooden lath **1.6 in the** middle of the supports, align the wooden lath evenly, make sure that the two holes point to the back wall. (**Important**, the recess in the wood must point upwards, this is where the front and back are inserted and mounted).
- Place 12x wooden slats **1.1**, evenly, flush and close to each other on the frame and screw them together as shown.
- Place the front and back panels in the groove of the wooden slats. Make sure that they are perpendicular and at right angles to each other (e.g. with the help of a spirit level).

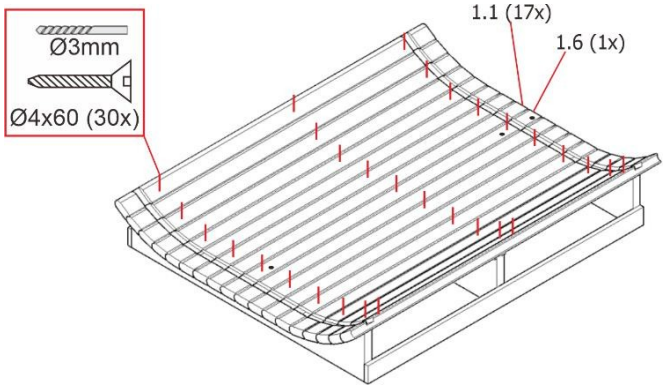

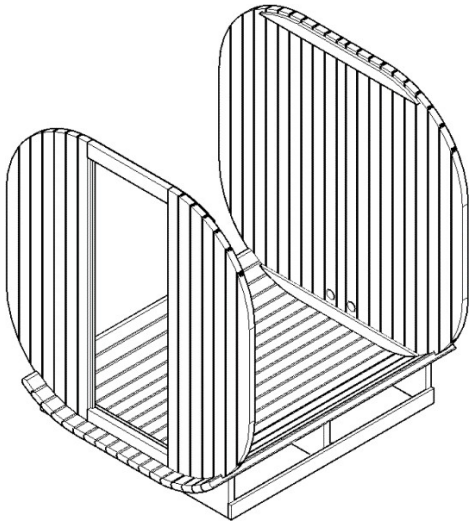

Step 5: Mounting the outer wall

- Place the next 32x wooden slats **1.1** with the groove in the front and back wall, evenly, flush and closely spaced to each other and screw them together as shown.

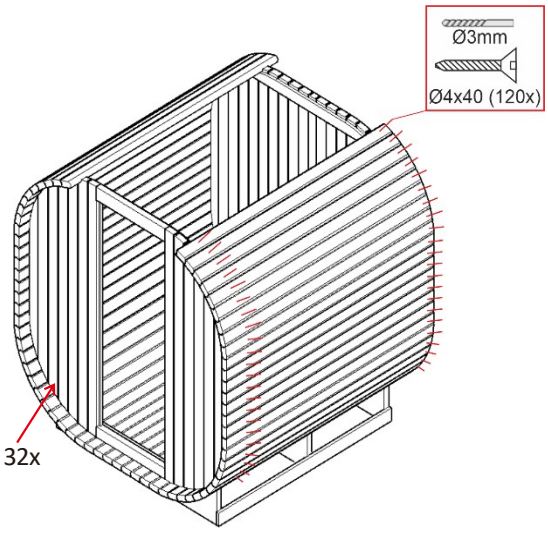

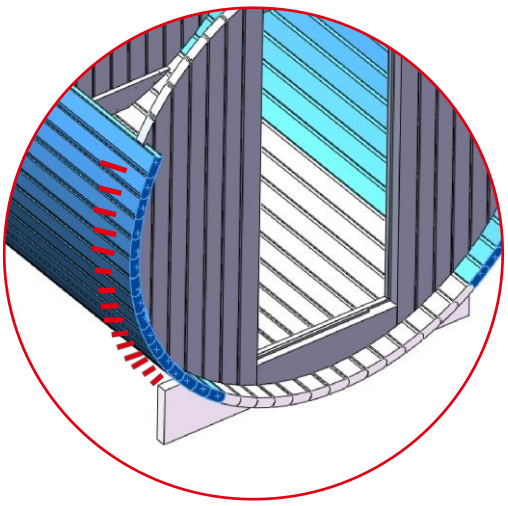

Step 6: Mounting the outer wall

- Place the next 17x wooden slats **1.1** with the groove in the front and back wall, evenly, flush and close to each other, as shown below.

  Note: Wood is a natural material that is exposed to environmental influences, therefore changes may occur. If the gap between the wooden slats **1.2** & **1.3 is** too large, the wooden slats **1.4** can be used in addition. Normally, the wooden slats are only a proviso.

- Place the wooden slats **1.2, 1.3 & 1.4** (see below) at the top centre with the groove in the front and back wall.

  Tip: For pre-tensioning the sauna, we recommend commercially available tensioning straps (**8**), these are more flexible and can pre-tension the product more strongly.

- Place 3 metal clamps around the product, place the protection under the joint, insert the screws through the holes and screw on the nuts. Then tighten the metal clamps with a suitable tool. Finally, put the caps on the thread.
  (If tensioning straps are used, these can now be removed again).

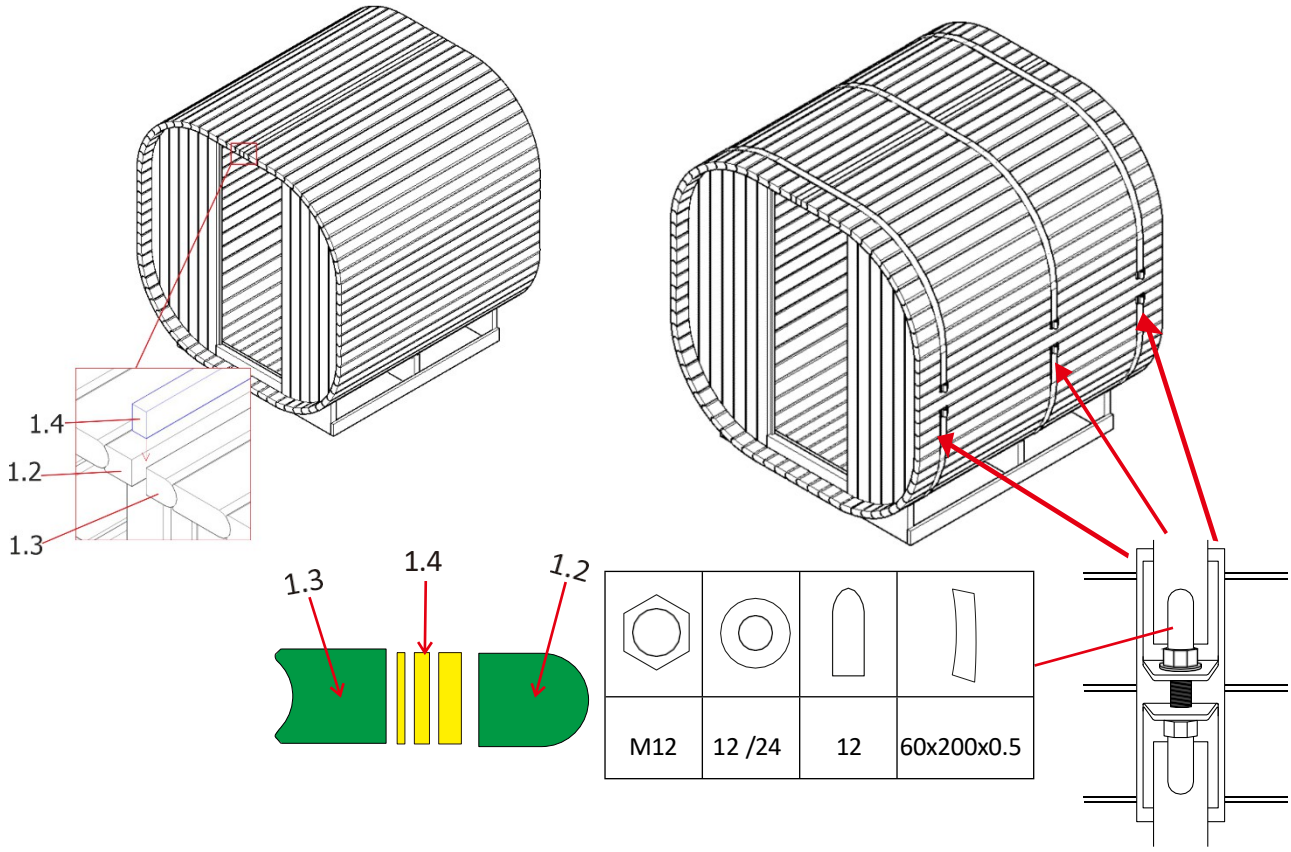

Step 7: Assembling the benches

- Screw 4x support wood **5.2** to the left and right of the seat mounting.
- Place the bench seats **5.1** on the receptacles.
- Fit the backrests **6.2** above the bench seats.

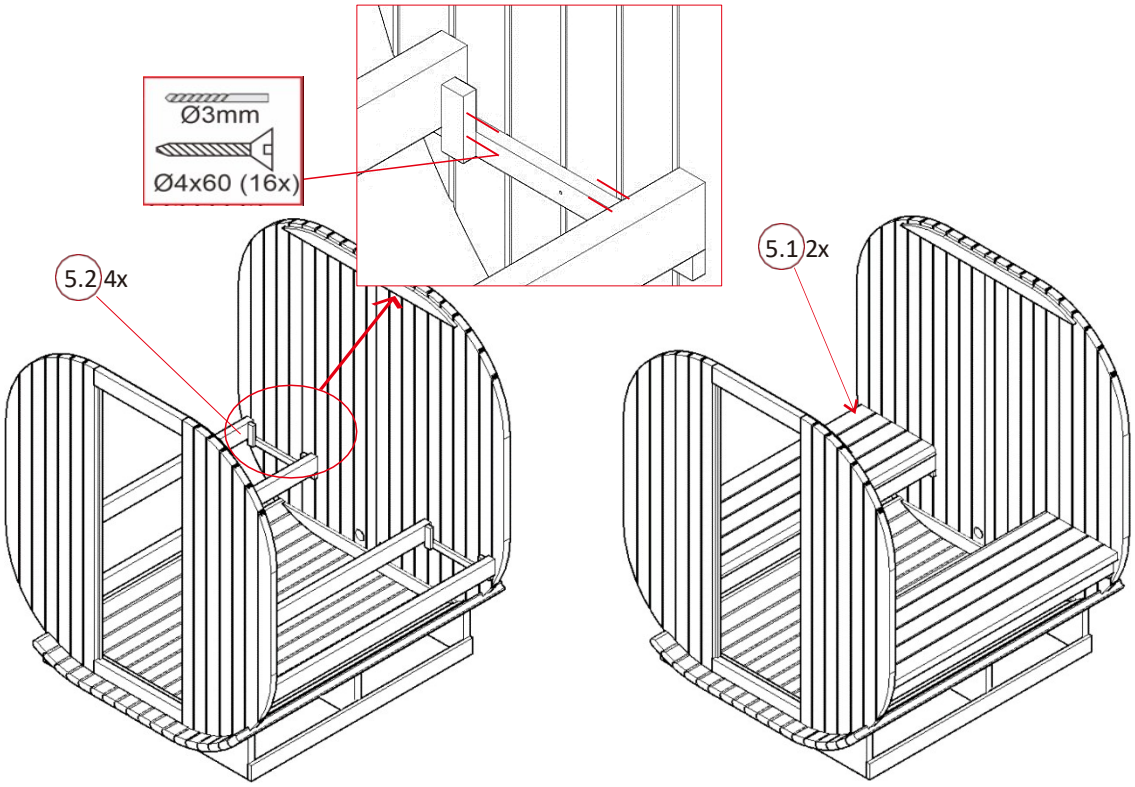

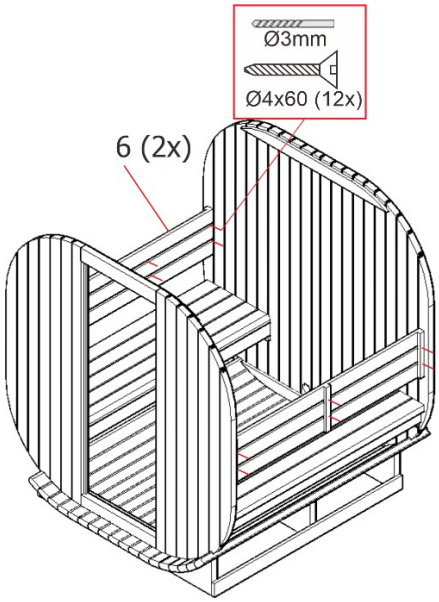

Step 8: Installing the sauna heater

- Mount the sauna heater on the bracket using the mounting materials supplied. Align the sauna heater vertically (**see chapter "Installation and electrical connection"**).
- The wall behind the heater must not be covered with materials such as asbestos or eternit sheets, etc., as this type of cover may cause excessive temperatures and a risk of burns.
- Use qualified materials for the ceilings and walls.

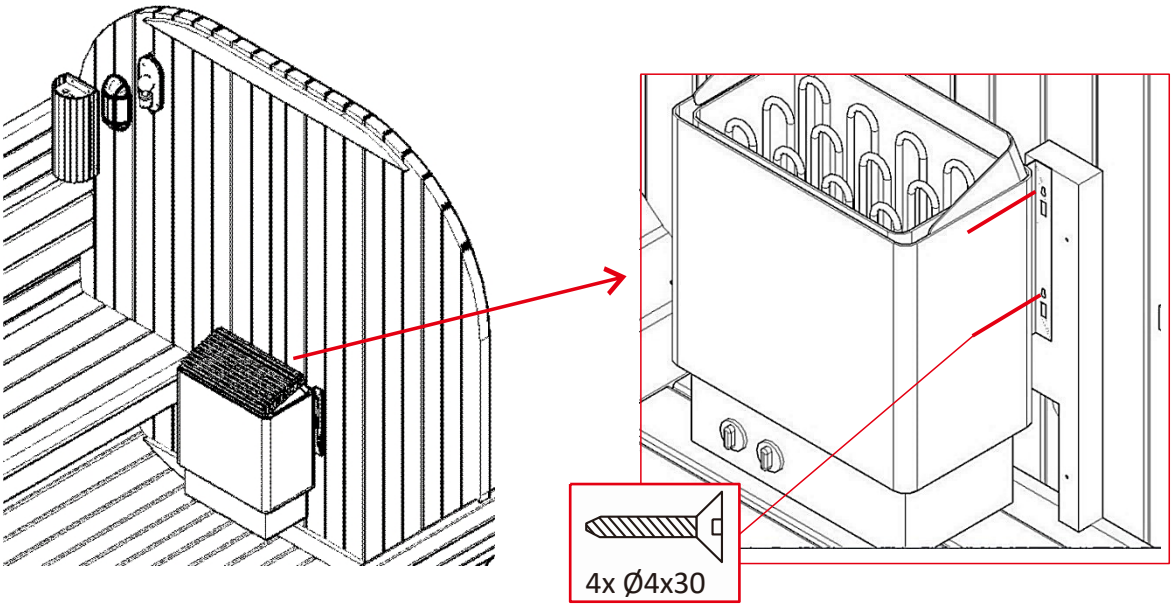

Attention: The sauna heater **must be** mounted on the back wall at a distance of 90 mm from the floor.

Step 9: Mounting the protective grille and electrical connection of the sauna heater

- Connect the sauna heater to the power supply. The electrical connection of the sauna heater may **only** be carried out by a qualified electrician, taking into account the current, valid electrical safety regulations (**see chapter "Sauna heater model: SCA-80"**).
- After the electrical connection, the protective grille can be fitted around the stove.
- Screw the components of the protective grille **9.1, 9.2 & 9.3** together.

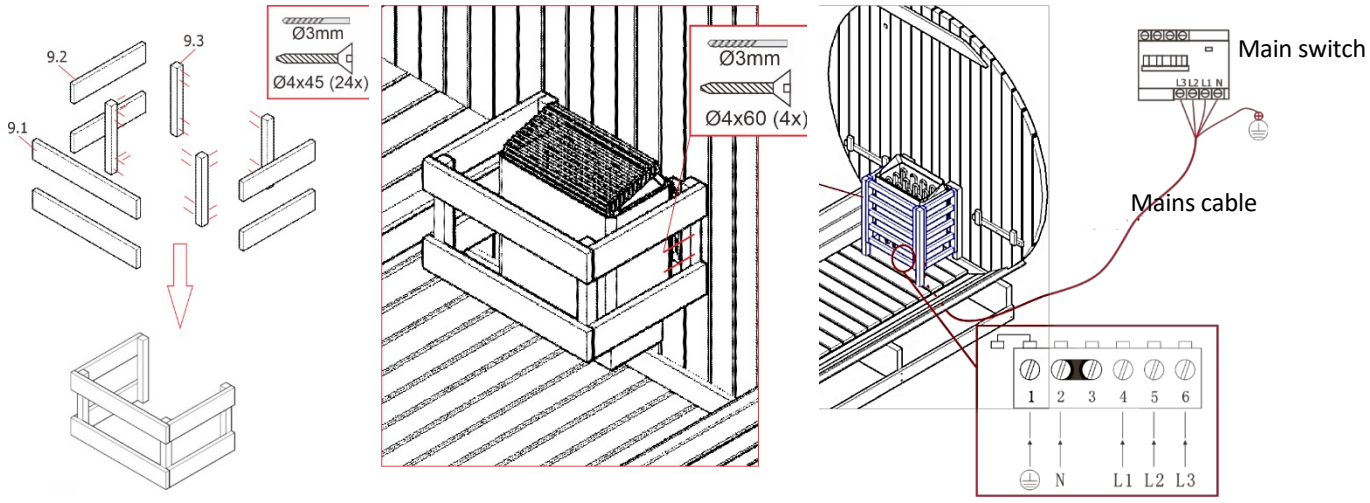

Step 10: Mounting the lamp

- Install the lamp incl. the lamp cover (**16**) and lamp shade (**17**) in the sauna heater as shown below, this may only be carried out by a qualified electrician (**see chapter "Installation and electrical connection"**).

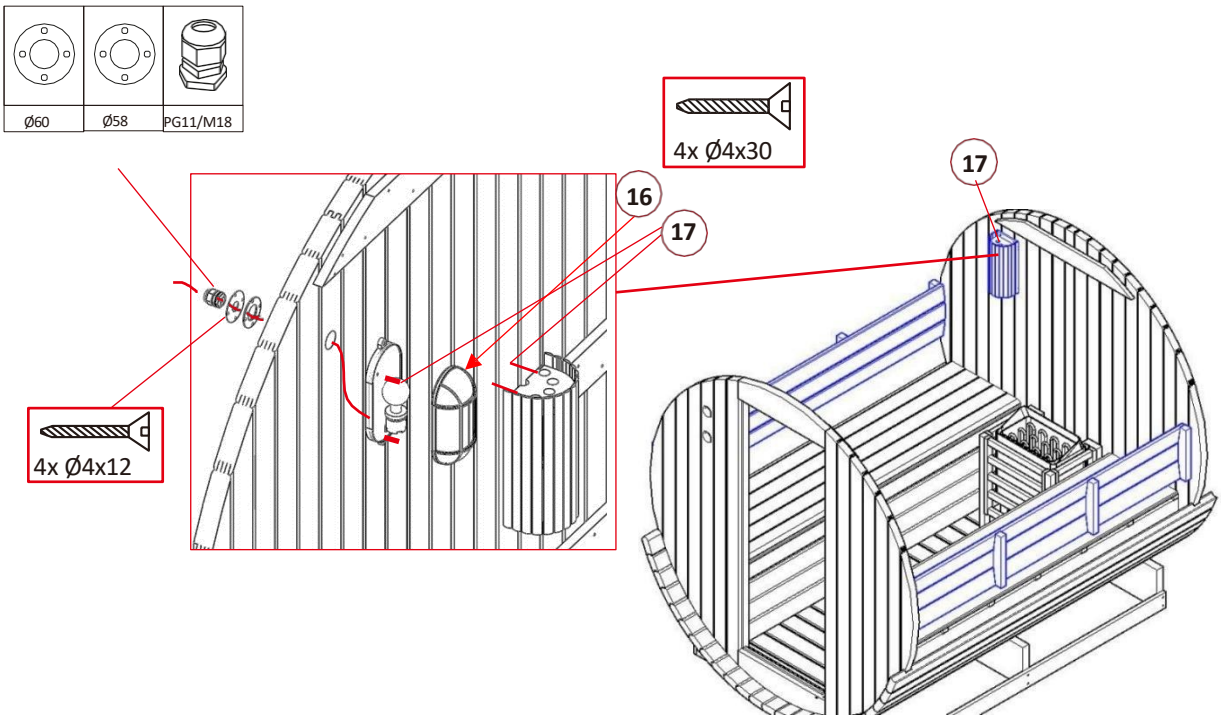

Step 11: Mounting the vent and glass door

- Fit the handle (**7.1)** and hinges **(7.3)** to the glass door (**7.2)** as shown below.
- Mount the glass door in the sauna front wall with 2 people and fix the hinges.
- Position the insulating foil **(10)** bubble-free, wrinkle-free and flush over the product. Any overhanging foil can be removed with a cutter knife.

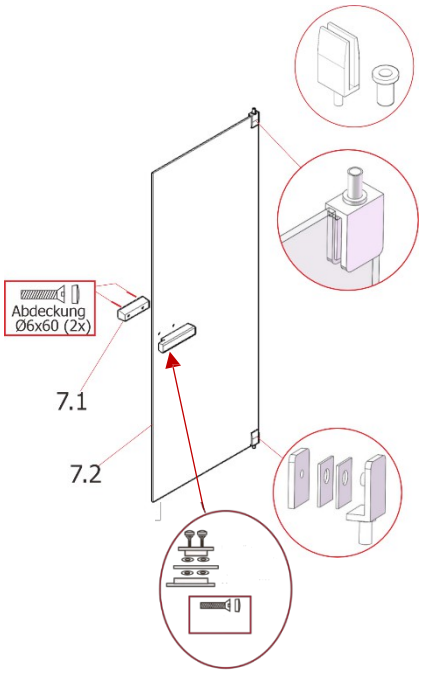

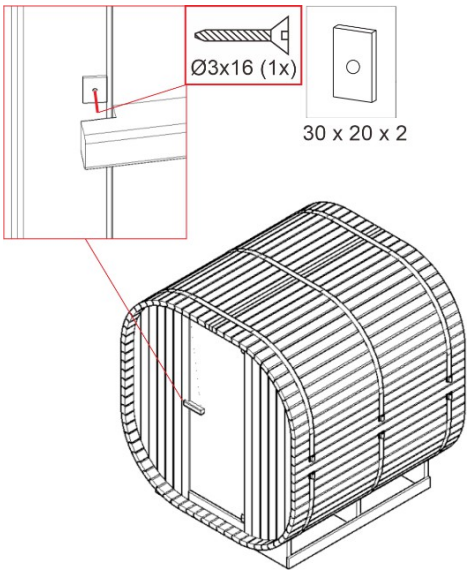

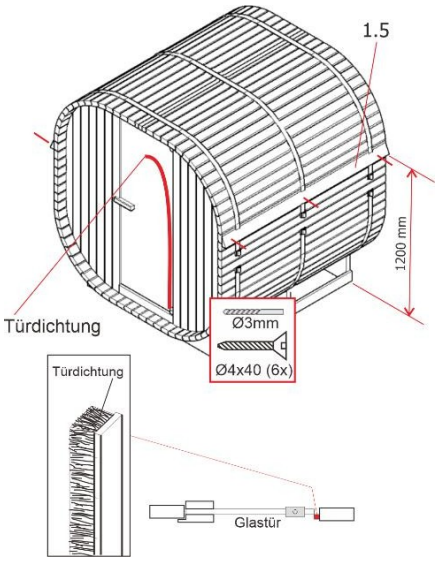

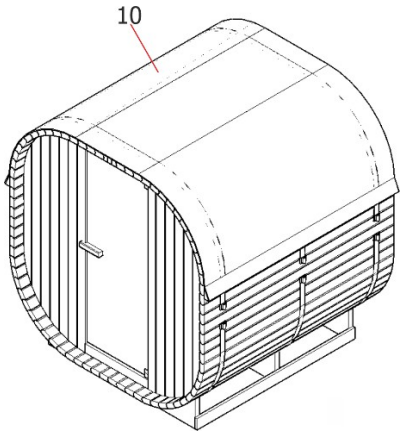

Step 12: Installing the shingles:

- When laying the shingles, start from both sides of the sauna front wall so that they meet in the middle.
- Attach the first shingles to the wooden batten so that the triangles protrude a little.
- The best way to fasten the shingles is with a stapler.
- The next row of shingles must overlap a little.
- Repeat these steps for the remaining shingles. Protruding shingles can be removed with a cutter knife.

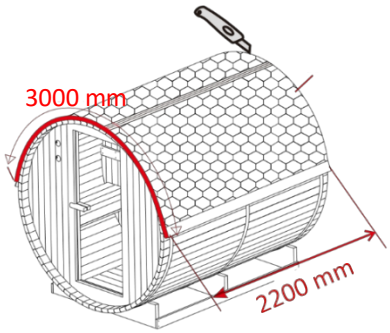

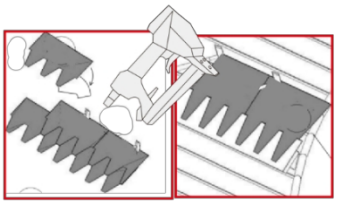

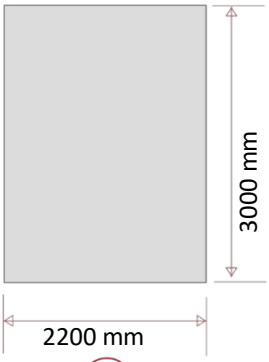

1

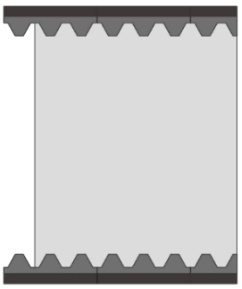

2 6 piece

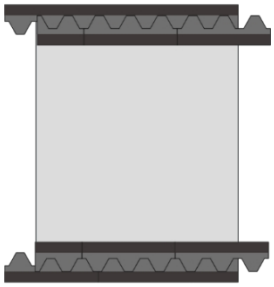

3 12 piece

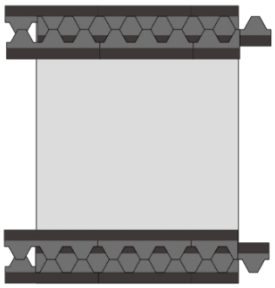

4 18 piece

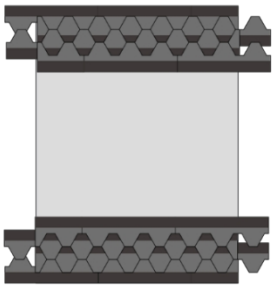

5 24 pieces

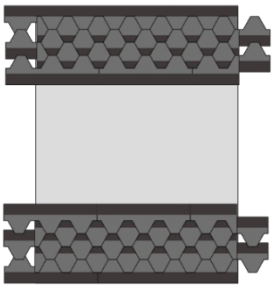

6 30 pieces

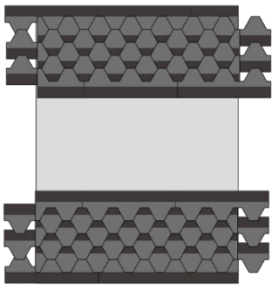

7 36 pieces

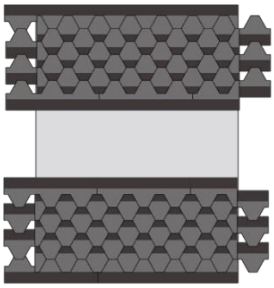

8 42 piece

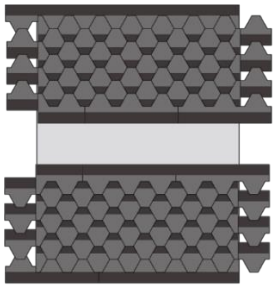

9 48 pieces

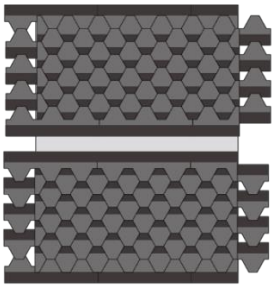

10 54 pieces

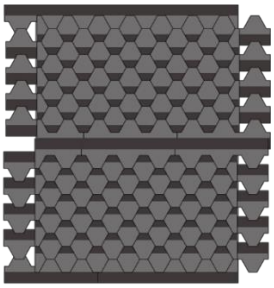

11 60 piece

5.3. Sauna heater model: SCA-80

General

The instructions refer to the sauna heater. They contain important information on assembly, operation and use. Read the instructions carefully, especially the safety instructions and operation, before assembling and operating the sauna heater and keep them in a safe place. Only use the sauna heater as described in these instructions to prevent accidental injury or damage. If the sauna heater is passed on to third parties, these instructions must also be handed over.

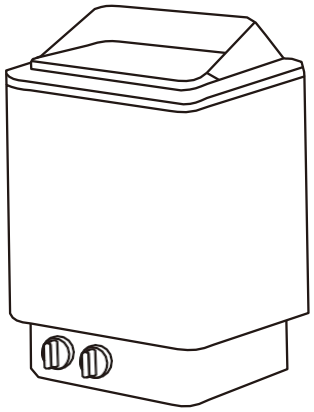

5.4. Safety instructions

Risk of injury

Improper handling of the sauna heater can lead to injuries.



- **Only** install the sauna heater if the scope of delivery is complete and undamaged.
- Risk of electric shock: The installation and maintenance work of the sauna heater **must be** be carried out by a qualified electrician.
- **Danger to life due to electrical voltage**: There is an immediate danger to life if live parts are touched. Damage to the insulation or individual components can be life-threatening. -> If the insulation is damaged, switch off the power supply immediately and arrange for repairs.
- After use, make sure that the sauna heater is switched off and the timer is set. is exactly at "**0**".
- **Do not** overtighten the knob of the timer, as this can lead to the sauna heater not switching off and continuing to run without a time limit.
- Do not throw sauna stones.
- Do not place the sauna stones between the heating elements.
- Avoid direct pressure on the heating elements when stacking the sauna stones.
- Lay the large sauna stones at the bottom when filling. Make sure that they are not placed too close together so that the air can still circulate.
- Remove broken or damaged stones from the sauna heater.
- Do not put too many sauna stones on the sauna heater.
- Do not place any objects on the sauna stones, the ventilation of the product must remain guaranteed.
- Excessive moisture can cause electrical equipment to malfunction.
- Do not pour too much water on the sauna stones, this can lead to excessively hot steam.

5.5. Installation and electrical connection

Attention: Read the assembly instructions completely and carefully before use.

- **Only** install your sauna heater if the scope of delivery is complete and undamaged.
- Make sure that all components are undamaged.
- Each sauna **must** be connected to its own electrical circuit. No other electronic devices may be connected to this socket.

Installation and electrical connection of the sauna heater

Install the sauna heater on the wall using the fixing materials supplied with the heater, according to the minimum safety distances and volumes indicated in Fig. 1.

- The electrical connection of the sauna heater may **only** be carried out by a qualified electrician, taking into account the current, valid electrical safety regulations.
- The stove can be mounted on the rear wall at a minimum height of 90 mm.
- The wall behind the heater must not be covered with materials such as asbestos or eternit sheets, etc., as this type of cover may cause high temperatures and a risk of burns.
- Use qualified materials for the ceilings and walls.
- The sauna cables must be connected to a wall-mounted junction box. The junction box should be splash-proof. The junction box must be splash-proof and must not be installed higher than 500 mm above the floor.
- The power supply cable must be REWE rubber insulated cable or at least an equivalent cable.

Wiring diagram

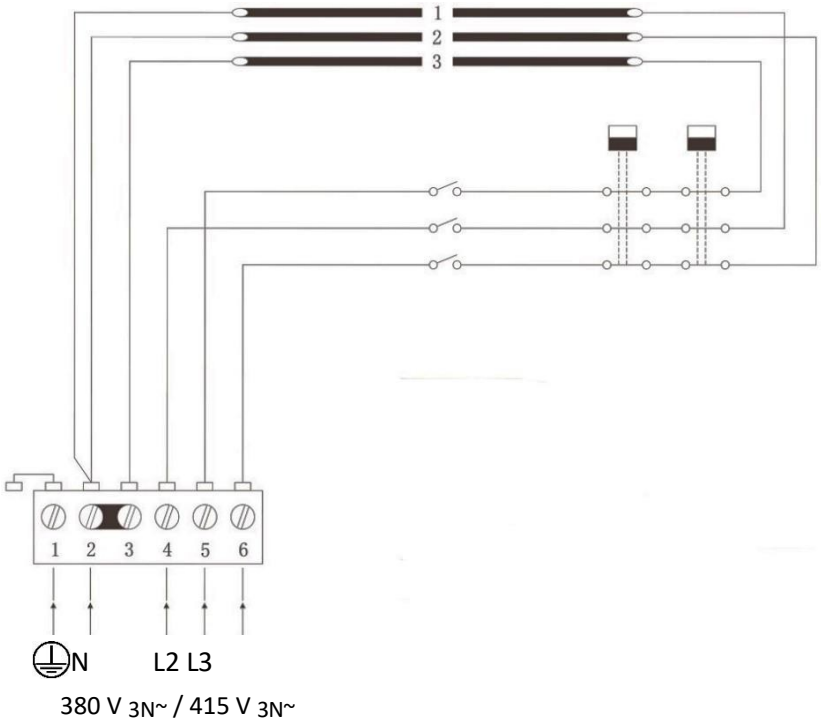

354SkSM 110A	Heating elements
Power KW	SEPC 64 2670 W
8.0	1, 2, 3

L1 L2 L3:	Connection of the phases
N:	Neutral conductor
⏚	Earth connection

Protective grille

When mounting the protective grille on the sauna heater, the minimum distances must be observed.

Connect lamps

The lamps of the sauna can also be connected in the junction box. These can use the same cross-section of the connection cables as for the sauna heater.

Attention: The upper screws must be firmly tightened, the minimum distance between the screw head and the wall must be 3 mm.

Sauna heater assembly

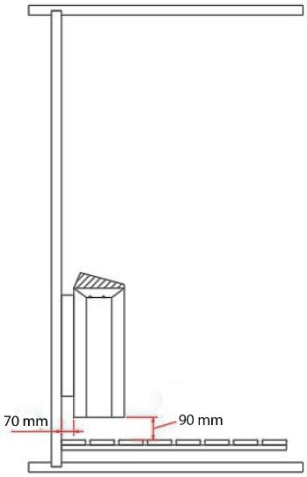

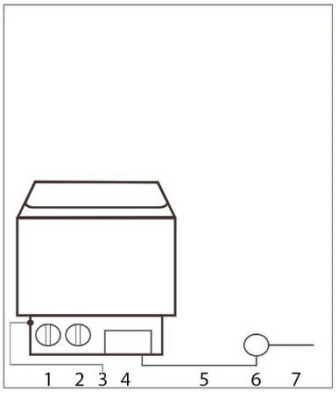

1 Mains switch
2 Thermostat
3 Temperature controller
4 Control
5 Mains cable
6 Junction box
7 Connecting cable

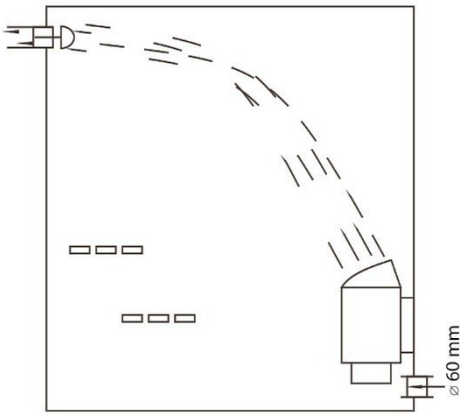

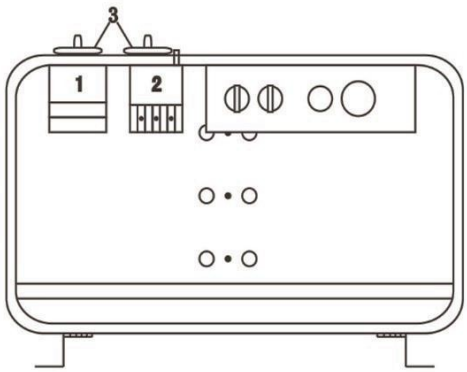

Model	Power	Cable for	
FK-80	KW	380 V3 ph 415 V3 ph mm^2	220 V1 ph 240 V1 ph mm^2
	8.0	5 x 2.5	3 x 10

6. Application

6.1. Safety instructions

The following health and safety information must be read carefully.

Risk of injury

Improper handling during operation can lead to injuries



- No modifications may be made to the product.
- Before switching on the sauna heater, make sure that no objects are stacked on the product and that they are at a safe distance.
- Make sure and check the timer that it is set to "**0**" after leaving the sauna.
  stands.
- **Do not** overtighten the knob of the timer, as this can lead to the sauna heater not switching off and continuing to run without a time limit.
- Children over 6 years of age may only use the sauna under adult supervision.
- During commissioning, the product **must** be under constant supervision.
- **Risk of burns:** Keep away from heated and hot surfaces. Do not touch the sauna heater, sauna stones and metallic objects during heating and sauna use.
- **Danger of scalding:** Keep at least 30 cm away from the hot, heated sauna heater.
- **Danger of scalding:** Do not pour water on the sauna stones if someone is in the direct vicinity of the sauna heater. The hot water can splash onto the sauna user.
- **Slip hazard:** Watch out for slippery floors when entering the sauna.
- Do not pour too much water on the sauna stones, this can lead to excessively hot steam.
- A sauna session can cause medical problems for the sauna user. The following group of people should consult a doctor beforehand:
  Pregnant women, heart disease, high blood pressure, circulatory problems, after taking medication, for diabetes, for feeling unwell.
- A sauna session should not last longer than half an hour. A sauna session that is too long can lead to rapid heartbeat, slight heart pain, a feeling of weakness or dizziness. If any of the above symptoms occur, the sauna session should be stopped immediately.
- Staying in a hot sauna for a long time can increase the blood temperature, which can have a negative effect on the body.
- Do not go into the hot sauna if you have just been drinking.
- Do not sleep in the hot sauna.
- Do not store bottles of infusion in the sauna.
- Drink some liquid after the sauna session.
- Keep your skin cool if necessary.

Risk of damage



- Before each use and at regular intervals, check all fastenings of the product for visible damage. Pay particular attention to load-bearing components. In case of material changes or damage, take the product out of service. Contact the manufacturer or its customer service for further instructions and, if necessary, spare parts.
- Do not force the sauna stones between the heating rods.
- The sauna stones do not have to fit and be placed completely between the heating rods.
- Check the fastening screws, the metal clamps etc. at regular intervals and tighten them if necessary.
- Do not use the product for drying laundry.

6.2. Initial commissioning

When the sauna heater and the sauna stones are first put into operation, they emit odours. After heating up the sauna cabin, ventilate it so that the air can be exchanged. When heating up for the first time, no persons should be in the sauna cabin.

6.3. Operation

Fire hazard: Covering prohibited



- It is forbidden to cover the sauna heater with objects.

Attention!

Please check with the fire safety authorities about the use of fire walls and insulation. The ventilation openings must not be insulated.

- The sauna offers space for 4-6 people.
- The sauna heater is equipped with a timer and a temperature control, where the time and temperature can be set and controlled. The sauna heater can be switched off at the timer in the "**0**" position.
- Sufficient air circulation is essential for sauna use. The air in the cabin should be renewed 6 times per hour. Properly installed ventilation creates pleasant sauna conditions and also saves energy.
- To maintain the temperature during the sauna session, close the vent.
- The ventilation openings must not be blocked during operation.
- After the sauna, open the vent to allow the sauna to dry.
- After the sauna, open the door so that the sauna cabin dries.
- Only use normal drinking water for infusion, no other liquids can damage the heating elements and the warranty claim will be void.
- Do not use too much water for the infusion, this can cause excessive hot steam.
- The function of the sauna heater is to bring the temperature of the sauna cabin to a suitable and pleasant temperature. The temperature is brought to a suitable temperature in about one hour, which is about + 65 °C.

6.4. Operating elements

Temperature control

The sauna heater can reach the preset temperature in 30 to 60 minutes, depending on the size of the sauna room, and this can be regulated by the thermostat to the temperature that is comfortable for you. A thermostat with a three-phase connection can ensure that a comfortable temperature is maintained in the sauna room. The temperature is set using the control dial.

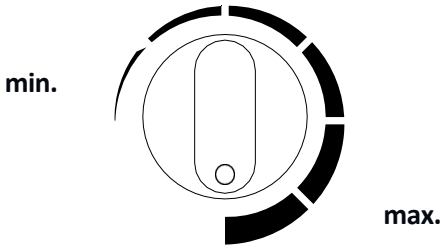

Timer

The timer is the "off switch" for the sauna heater, which must be set exactly to "**0**" to switch it off. The heating time is set using the rotary control.

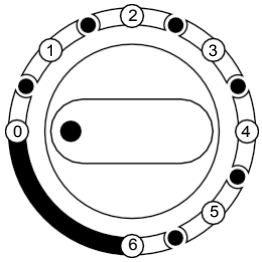

= Off

Time span0

1 = 30 min
2 = 60 min
3 = 90 min
4 = 120 min
5 = 150 min
6 = 180 min

6.5. Sauna stones and sauna infusion

Information about the sauna stones

- **Recommendation:** Before using the sauna stones for the first time, clean them from dust and place them in a stack in the sauna heater.
- Place the large sauna stones at the bottom when filling the sauna heater. Make sure that they are not stacked too tightly, the air **must** still **be** able to circulate.
- The sauna stones must be of the best quality. Use a solid sauna stone that is especially suitable for use in electric sauna heaters.
- Load sufficient sauna stones (10 - 15 kg) into the sauna heater after the installation of the sauna heater and the control box has been completed.
- The diameter of the sauna stones is usually 5 to 25 cm.
- The sauna stones should be made of a solid volcanic rock, such as peridot.
- Do not use loose or porous ceramic stones, these can cause damage to the sauna due to high temperatures.
- Do not place sauna stones directly on the heating elements.

Sauna infusion

- In the sauna cabin, the air becomes dry when it is heated and warmed up. An appropriate amount of water on the hot sauna stones brings the humidity to the right level. After the infusion, with the ladle, the skin feels the effects of the increased humidity.
- The right level of humidity gives the skin natural perspiration and gentle breathing. Too high a temperature and humidity can lead to an uncomfortable feeling. A longer stay in the sauna cabin can lead to an increase in body temperature. The sauna-goer should feel comfortable.
- The capacity of the ladle used for infusion should not exceed 200 ml.

7. Troubleshooting

If faults occur in the operation of the product, please check the following fault causes using the following table. If the fault cannot be rectified, please contact the customer service:

Error	Possible cause	Solution
The sauna wobbles or swings	• The sauna stands on an uneven loose surface	• Place the sauna on a flat, solid surface.
Heat escapes from the sauna	• Metal clamps have come loose	• Tighten the metal tensioner
The sauna heater cannot be switched on	• No mains voltage	• Check the fuse or FI switch of the power supply • The main switch of the power supply is off.
The sauna heater does not switch off	• The timer is not exactly set to "**0**". • The timer has been turned past the 0 position	• Set the timer exactly to "**0** place • Set the timer exactly to "**0** place
The sauna heater does not work properly	• Overheating protection has triggered • Thermostat not set correctly • Timer is set to "0	• Contact the customer service • Set the temperature correctly • Set timer to on
The sauna heater does not heat up properly	• Heating elements are not in order • Temperature does not rise • Sauna stones are too close together • Ventilation closed	• Check the heating elements • Increase temperature • Re-stack the sauna stones so that the air can circulate. • Open the ventilation
The sauna heater heats up quickly, the sauna stones do not get warm properly. Water drains behind the sauna stones.	• Ventilation closed • Thermostat regulates the temperature down • The heating power is too high	• Open the ventilation • Contact the customer service • Contact the customer service

Error	Possible cause	Solution
Noises from the sauna	• Sauna stones and sauna parts can make noise when they heat up or cool down. • Timer ticks loudly	• No error • No error

8. Maintenance and care

- High humidity in the sauna cabin does not harm the wood.
- The sauna room must be well aired after the sauna session and an appropriate drying phase should be observed.
- Spray the wood (walls and benches) in the sauna cabin with water.
- Wipe wooden surfaces with a damp cloth.
- Depending on the use, treat the seating surfaces with fine sandpaper at least once a year.
- If the benches are very dirty, they can be cleaned with a 3% hydrogen peroxide solution.
- Some of the sauna stones break naturally during use. Refill the sauna heater with new sauna stones.
- Remove the sauna stones at least once a year and reposition them. This will make the sauna more efficient and avoid overheating problems.



Disinfectants are highly corrosive!
Also follow the instructions of the detergent or disinfectant manufacturer. Wear protective gloves when cleaning.

- After installation, stain the sauna exterior walls with a commercially available wood stain, check the coating annually and repair any faulty areas.



Never paint, varnish or impregnate the inside of the sauna cabin or other wooden objects (benches, protective grilles, etc.). These surfaces develop toxic gases when the sauna cabin heats up.

9. Disassembly

9.1. Safety instructions

Risk of injury
Improper handling during disassembly can lead to injuries



- Disconnect the product from the power supply before disassembly. Contact with live components may result in electric shock, burns or death.
- The product has a high weight and large dimensions, at least 4 people are required for disassembly.
- Secure the product against falling before disassembly.

Disassembly of the product must be carried out in reverse order to assembly. (**see chapter Assembly**)

10. Disposal

10.1. General notes



- Dispose of the product and all components in accordance with local and country-specific regulations, thereby avoiding damage to the environment.
- Our packaging is made from environmentally friendly materials. These can be recycled and thus serve as valuable raw materials. Dispose of the packaging material (cardboard boxes, dirty packaging etc.) separately and properly in accordance with the applicable national regulations.
- Contact the manufacturer if you are unsure about disposal.
- You can also obtain information on proper disposal from local waste disposal centres.

Electrical and electronic equipment - Information for private households

The Electrical and Electronic Equipment Act (ElektroG) contains a large number of requirements for the handling of electrical and electronic equipment. The most important ones are summarised here.

1. Separate collection of waste equipment

Electrical and electronic equipment that has become waste is referred to as WEEE. Owners of WEEE are required to dispose of it separately from unsorted municipal waste. They shall non-destructively separate waste batteries and accumulators that are not enclosed in the WEEE, as well as lamps that can be removed from the WEEE without destroying it, from the WEEE before handing it in at a collection point. Separate WEEE to prepare it for reuse.

2. Options for returning old appliances

Owners of old appliances from private households can hand them in at the collection points of the public waste management authorities or at the take-back points set up by manufacturers or distributors as defined by the Elektro G. An online list of collection and take-back points can be found on the website: https://www.stiftung-ear.de or https://www.take-e-back.de.

3. Data protection notice

Old devices often contain sensitive personal data. This applies in particular to information and telecommunication technology devices such as computers and smartphones. In your own interest, please note that each end user is responsible for deleting the data on the old devices to be disposed of.

4. Distributors' take-back obligation

Distributors with a sales area for electrical and electronic equipment of at least 400 m^2 as well as distributors of food with a total sales area of at least 800 m^2 , who offer electrical and electronic equipment several times per calendar year or permanently and make it available on the market, are obliged,

- when supplying a new EEE to an end-user, to take back free of charge at the place of supply or in the immediate vicinity thereof an old EEE of the end-user of the same type which fulfils substantially the same functions as the new EEE; and
- to take back, at the end-user's request and free of charge, WEEE that does not exceed 25 cm in any external dimension in the retail outlet or in the immediate vicinity thereof; the take-back may not be linked to the purchase of an EEE and is limited to three WEEEs per type of equipment.

5. Meaning of the "crossed-out dustbin" symbol



The symbol of a crossed-out wheeled bin regularly displayed on electrical and electronic equipment indicates that the respective device must be collected separately from unsorted municipal waste at the end of its service life.

- Manufacturer registration number
- As a manufacturer within the meaning of the ElektroG, we are registered with the responsible Foundation Elektro-Altgeräte Register (Nordostpark 72, 90411 Nuremberg) under the following registration number: WEEE Reg. No. DE86467979

Home Deluxe GmbH
Schanzeweg 2
32312 Lübbecke Germany
Tel.: +49 (0)5743 6181-0
www.home-deluxe-gmbh.de

GA-132-00-CUBE_XL
2023/08